KeAi
CHINESE ROOTS
GLOBAL IMPACT

International Journal of Innovation Studies



POWER FACTOR IMPROVEMENT THROUGH TUNING OF CAPACITOR IN RENEWABLE ENERGY SYSTEM

Dr. S. BASKAR
Professor / Dept. of EEE,
POLA SREENIVASULU, POOLA KHADERULLA
Dr. K. SARAVANAN
Professor & Head of Dept / EEE.
Dr Dr. M.G.R. Educational and Research Institute, Maduravoyal, Chennai. India.
Email: Baskar.srinivas@drmgrdu.ac.in, polasreenivasulu01031986@gmail.com, Poolakhaderulla313@yahoomail.com, saravanan.eee@drmgrdu.ac.in

Abstract

The use of renewable energy sources, such photovoltaic (PV) systems, has increased due to rising energy consumption and environmental concerns. However, power factor problems are frequently introduced when PV systems are integrated with the electrical grid, which can lower the grid's overall stability and efficiency. This study investigates ways to raise the power factor in a grid-connected system that has a photovoltaic installation. We examine the difficulties of preserving an ideal power factor when PV generation is present, taking into account changes in solar irradiance and grid circumstances. A hybrid approach to power factor adjustment that combines active and passive compensation techniques is suggested. Inf f order to dynamically modulate the power factor and guarantee optimal energy production from the solar array, the integration of a reactive power controller with the PV inverter system is also investigated. According to simulation results, the suggested method successfully lowers reactive power losses, stabilizes grid voltage, and eliminates harmonic distortion, all of which improve grid performance and energy efficiency. The results emphasize how crucial sophisticated power factor correction methods are to the dependable and long-term integration of renewable energy sources into the electrical grid.

Key words: power factor correction, reactive power flow, optimize grid performance, electrical grid, PV grids, PV-integrated grid system, passive compensation, active power factor correction (PFC) controllers, PV inverters,

1.INTRODUCTION

The need for sustainable energy solutions and lower carbon emissions has led to a major increase in the electrical grid's integration of renewable energy sources, especially photovoltaic (PV) systems. PV systems do, however, present a number of issues for grid stability and power quality, despite their many benefits, which include lower electricity costs and less of an influence on the environment. The power factor, which is a major component in determining the effectiveness of electrical systems, is among the most noticeable problems. A system's true power to apparent power ratio is known as its power factor, and a low power factor can result in wasteful energy use, increased transmission losses, and more strain on the grid's infrastructure.

The intermittent nature of solar power, variations in solar irradiation, and the non-linear behaviour of PV inverters are some of the reasons that can negatively impact the power factor in a PV-integrated grid system. It is challenging to consistently maintain an ideal power factor because of these oscillations, which cause changes in the active and reactive power balance. Voltage instability, an increase in reactive power flow, and possible fines from utility companies for failing to fulfil power factor standards can result from improperly managed power factor.

2.EXISTING SYSTEM

There are a number of possible drawbacks to connecting a photovoltaic (PV) system to the grid without power factor correction, particularly with regard to system performance, grid stability, and overall efficiency. Maintaining the effective power transfer between the grid and the generating source—in this case, the solar panels—requires power factor correction, or PFC. A system without PFC may encounter a number of difficulties

Existing System

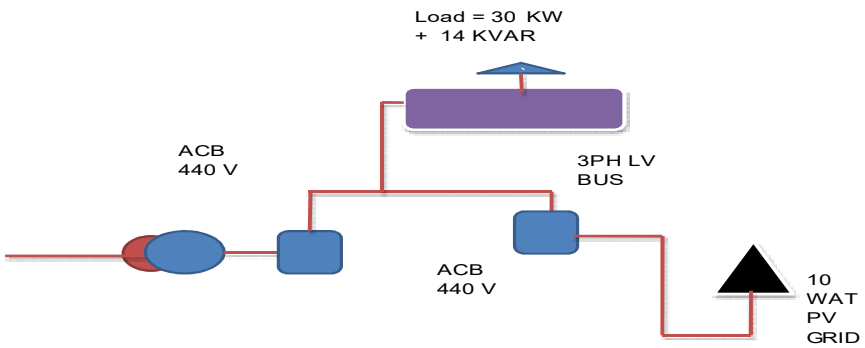

3.0 DESIGN OF CIRCUIT

The process of designing a photovoltaic (PV) grid system's capacity for power factor (PF) enhancement include figuring out how big the PV system should be in order to offset the reactive power needs of an electrical network. Either providing active power (real power) or modifying the phase angle between the system's voltage and current will increase the power factor. This methodical approach to PV system design focuses on increasing the power factor.

3.1. DETERMINE THE POWER FACTOR REQUIREMENT

Establish the desired power factor that the system must reach. For instance:

- **Desired Power Factor (PF)**: 0.95 or 1.0 (depending on industry standards and local regulations).

3.2.SIZING THE PV SYSTEM BASED ON POWER FACTOR IMPROVEMENT

A PV system contributes very little to reactive power and can only deliver real power (kW). The PV system must be sized properly to lessen the strain on grid-generated active electricity in order to increase power factor. This makes it possible for other parts (such synchronous condensers or capacitors) to manage reactive power compensation more effectively.

4.0.IMPLIMENTATION OF PROPOSED SYSTEM:

BLOCK DIAGRAM FOR A SYSTEM WITH CONNECTED PV GRID OF 10KWp AND APFC 8 KVAR

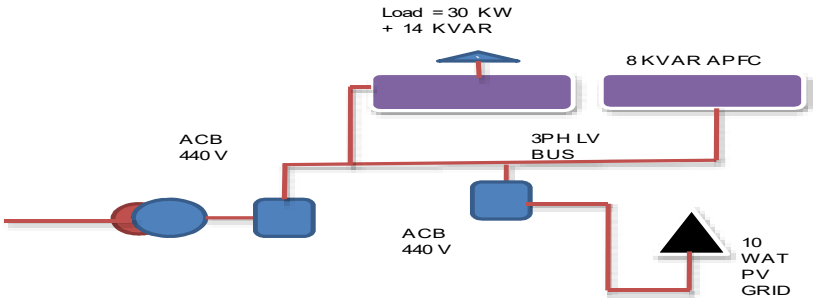

Fig.2 Block diagram for proposed system

4.1.30 KW,14 KVAR LOAD 3 PHASE:

Key electrical characteristics including apparent power (S), power factor (PF), and line current (I) must be calculated for a three-phase load with 30 kW of real power and 14 kVAR of reactive power. The computations based on the provided values are shown below. Given:

- 30 kW is the real power (P).
- 14 kVAR is the reactive power (Q).
- Line-to-line voltage (V_L) = 400 V (this is an assumption; if it's different, you can change)

The apparent power (S) is the vector sum of real and reactive power:

S=P2+Q2S = \sqrt {P^2 + Q^2} S=P2+Q2

4.2. FOR A 30 KW, 14 KVAR LOAD IN A 3-PHASE SYSTEM WITH A 400 V LINE TO-LINE VOLTAGE:

- The **apparent power** is approximately 3**3.12 kVA**.
- The **power factor** is approximately **0.905** (lagging), which indicates the load is inductive.

4.3. **ENERGY OUTPUT CALCULATIONPV GRID HAVING 10 KWP**

Assuming the above, let's calculate the energy output of a 10 kWp PV system:

•Under optimal circumstances, the peak power output is 10 kW.

• There are five hours of sunlight on average per day, though this will vary by region. One way to estimate the daily total energy production (in kWh) is to:

A 10 kWp PV system may generate about 50 kWh of energy per day in the best of circumstances.

5.0.**INVERTER AND SYSTEM LOSSES**:

The system will actually suffer some losses as a result of:

• Inverter Efficiency: Modern inverters typically have an efficiency of 90–98%.

• Cable Losses: Tiny losses occur in the cables that connect the PV system to the inverter and the grid.

• Panel Efficiency: Depending on the technology, solar panels typically have an efficiency of 15% to 20%.

Let's assume 85% system efficiency after accounting for average losses. The real energy output might be approximately 42.5 kWh per day based on the modified energy output.

5.1.IMPROVING OF POWER FACTOR:

In order to comprehend the concept of power factor, it is assumed that a three-phase load uses 30 kW and 14 KVR from the grid. The KVA consumed from the grid is then equal to SQRT (KW^2 + KVAR^2) = SQRT (30^2+14^2) = 33.1058.

Power Factor (PF) = KW/KVA=30/33.1058=.906 Lag

The power factor of the same system will fall if a 10KWp PV grid is linked to it, as demonstrated by the addition of 10 KWp +0 KVAR to the current system for the power factor research idea.

Fig-3 Vector diagram PF Reduction

Now the Consumption from the Grid = Total Load -Solar capacity

= (30KW+14KVAR) - (10KW+0 KVAR)

=20KW+14KVAR

KVA from the Grid = SQRT (20^+14^)

=24.4131

When PV Grid Capacity 10 KWp is connected to an AC system with a load of 30 KW+14 KVAR, the system's power factor decreases from 0.906 Lag to 0.8192 Lag.

5.2.**DEMONSTRATING HOW APFC IMPROVES P.F.**

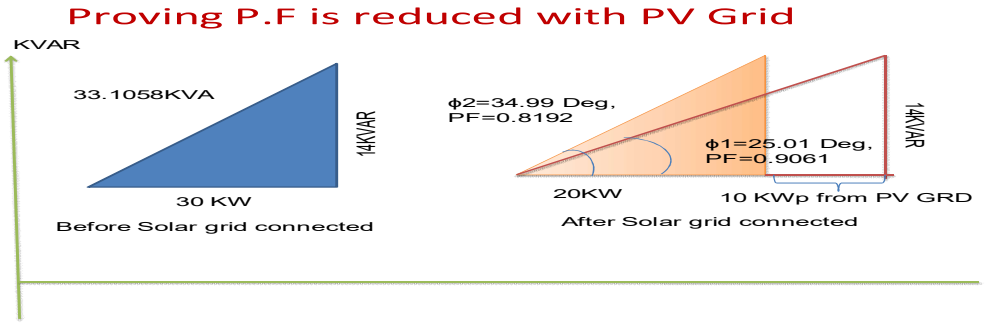

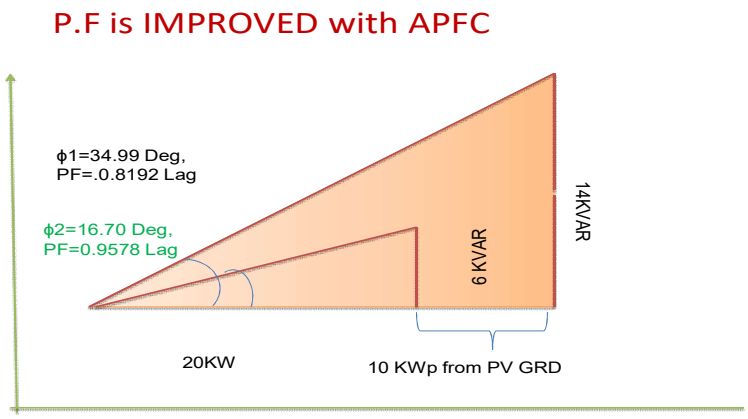

Fig-4 Vector diagram for P.F Improvement

For improving the above Power Factor (PF) of 0.8192 Lag to 0.9578 Lag, A Capacitive bank (APFC Capacity of 8 KVAR) is proposed and explain below

Consumption from Grid = Total Load -Solar capacity-APFC Capacity

= (30KW+14 KVAR)-(10KW+0 KVAR)-(0 KW + 8 KVAR)

= (20KW+6 KVAR)

KVA from the Grid = SQRT (20^+6^) =20.88

Now Power Factor (PF)= KW/KVA = 20/20.88=0.9578 Lag

5.3.Algorithm/Techniques/Tools Used:

1.MAT LAB

2.Digiscilant Factory

6.0. SIMULATION RESULTS:

The power factor increased from 0.8192 lag to 0.9578 lag. Prior to the PV grid, the factor was 0.906 lag for the identical system. The power factor drops to 0.8192 Lag after connecting this system to the 8 kVAR PV grid.

Presently the power factor is improved to 0.95 Lag.

6.1.SIMULATION DIAGRAM: **I**



Fig.5 Block diagram for proposed system

Presently the power factor is improved to 0.95 Lag

7.0. CONCLUSION

The power factor increased from 0.8192 lag to 0.9578 lag. Prior to the PV grid, the factor was 0.906 lag for the identical system. The power factor drops to 0.8192 Lag after connecting this system to the 8 kvar PV grid ,presently the power factor is improved to 0.95 Lag

REFERENCES/BIBLOGRPHY

[1].Impact of Grid- Connected Photovoltaic System on Low VolatageDistribution,Conference paper: July 2023,EmadAbdelsalam(AI Hussein Technical University, Jordan Hassan Qandil (University of Texas
[2]. “Impact of Grid- Connected Photovoltaic System on Low Volatage Distribution”, Authors:DareenHabash (Al Hussein Technical University Amman 11831, Jordan), Ahmad Azzam (Al Hussein Technical University Amman 11831, Jordan), Reda Issa(JEPCO Amman 11831, Jordan) , Emad Abdelsalam (Al Hussein Technical University Amman 11831, Jordan) and Hassan Qandil (University of North Texas Denton-Texas 76207, USA)IEEE Jordan International Joint Conference on Electrical Engineering and Information Technology (JEEIT) 2023
[3].Grid-Connected Photovoltaic System With Power Factor Correction,IEEE, MAY 2008Yu-Kang Lo, Ting-Peng Lee, and Kuan-Hung Wu
[4].Design and Control of Hybrid Power Systems for Power Factor Correction"Authors: A. A. Alghamdi, S. A. Zohdy*Renewable and Sustainable Energy Reviews, 2016*
[5].Analyzing the consequences of power factor degradation in grid-connected solar photovoltaic systems,SELVIER /2024 . Edward DodziAmekah PLUS 5 members
[6]Mustafa M.A. Seedahmed, Makbul A.M. Ramli,Houssem R.E.H. Bouchekara, Ahmad H. Milyani, MuhyaddinRawa, FirmansyahNurBudiman, RifqiFirmansyahMuktiadji and Syed MahboobUlHassan“Optimal sizing of grid-connected photovoltaic system for a large commercial load in Saudi Arabia", ELSEVIER /2021
[7]. Solar Photovoltaic System Integration with Power Grid for Power Factor Correction D.K. Khatod, N. Saini,*IEEE Transactions on Power Systems*

[8]. Optimal Sizing of Solar Photovoltaic Systems for Power Factor Correction"Authors: R. Das, A.Chattopadhyay*Energy Conversion and Management, 2015*[9]. “Power Factor Analysis of Grid -Connected Solar Inverter under Different Irradiance Levels throughout the Day”, Author:Suleyman Adak (University of MardinArtuklu, Turkey) Energies 2024
BOOKS:
1. **Solar Engineering of Thermal Processes**Author: John A. Duffie, William A. BeckmanPublisher: Wiley, 2013*This book offers detailed insights into the design and operation of solar energy systems, including PV systems and their integration with the grid.*
2. **Photovoltaic Systems Engineering**Author: Roger A. Messenger, Jerry VentrePublisher: CRC Press, 2010*A comprehensive guide on the design and implementation of PV systems, with emphasis on system sizing, integration, and optimization, including power factor considerations.*
3. **Electric Power Systems: A Conceptual Introduction**Author: Alexandra von MeierPublisher: Wiley-IEEE Press, 2006*A great resource for understanding electric power systems, their components, and how to improve system efficiency, including power factor management.*
4. **Power System Analysis and Design**Author: J. Duncan Glover, Thomas Overbye, Mulukutla S. Sarma
Publisher: Cengage Learning, 2017*This textbook provides detailed concepts related to*

power system operation, including load flow analysis, reactive power compensation, and power factor correction strategies.

BIOGRAPHY



DR.S.BASKAR received his B.E (Electrical & Electronics Engineering) from Annamalai University and M.Tech (Power Electronics) from Vellore Institute of Technology, India. He has completed his Ph.D-EEE in the specialization of FACTS controllers from Annamalai University. He has more than twenty-two years of experience in the fields of teaching, research and academic administration. He is currently working as a Professor (EEE) & Academic Dean Research in the Dr M.G.R. educational and research institute, Chennai, India. Four scholars are awarded the Ph.D. degree under his guidance. He has registered two patents. He has completed one International Research Project as Indo-France Joint Collaboration.



POLA SREENIVASULU received his B.tech (Electrical & Electronics Engineering) from AadiShankara college of engineering & technology, Guduru, Nellore dist, Andra Pradesh, India, He is presently working as a Senior Section Engineer at Integral Coach factory (An Esteemed production Unit of Indian railways), Chennai-600038. Presently he is acquiring the M.tech degree from Dr M.G.R. educational and research institute, Chennai, India.



POOLA KHADERULLA is working as Senior Section Engineer at Integral Coach Factory (an esteemed production unit of Indian Railways), Chennai-600038, Tamil Nadu, India. He has a working experience of 15+ years in field of Production, Quality Assurance, Material Management, and Estimation Costing & Budgeting of Electrical Department of coach production process. He received 63rd Railway week award for excellent work during the productionYear2015-16. He completed his B. Tech from KSRM College of Engineering, Kadapa, Andhra Pradesh, India. Now he is pursuing his M. Tech degree from Dr. M.G.R Educational and Research Institute, Chennai.



DR.K SARAVANAN working as a professor and Head, Department of Electrical and Electronics Engineering. Dr. M.G.R Educational and Research Institute, Chennai. He has 21 years of Teaching and Research Experience. He has published several Research papers in journals and conference in both National and international. He has obtained B.E from the Government College of Technology, Coimbatore. Post graduate (M.E) and Ph.D. from Anna University Chennai. He has specialization in the area of Power electronics, Electrical Machines and Hybrid Renewable Energy systems. He has been involved in funded research & development projects and laboratory modernization projects.
He has also worked as a technical consultant in the area of rice mill boiler heat exchanger systems.